| Name: Frank Root | Date: Sept 2020 | Event: Surf City | Track: OCRC Raceway |
|---|---|---|---|

## Track Conditions

| | | | | | | | | | |
|---|---|---|---|---|---|---|---|---|---|
| ☑ Indoor | ☑ Clay | ☐ Carpet | ☐ Tight | ☑ Smooth | ☑ Hard Packed | ☑ Blue Groove | ☐ Wet | Bite: ☐ Low ☐ Med ☑ High | Other: _____ |
| ☐ Outdoor | ☐ Dirt | ☐ Astro | ☑ Open | ☐ Rough | ☐ Loose/Loamy | ☑ Dry | ☐ Dusty | Tread: ☐ Pin ☐ Ghost ☑ Slicks | |

## Front Suspension

| | | |
|---|---|---|
| Ride Height | 20 | mm |
| Camber | -2 | ° |
| Toe | +1 | ° |
| Sway Bar | - | mm |

Notes: _____

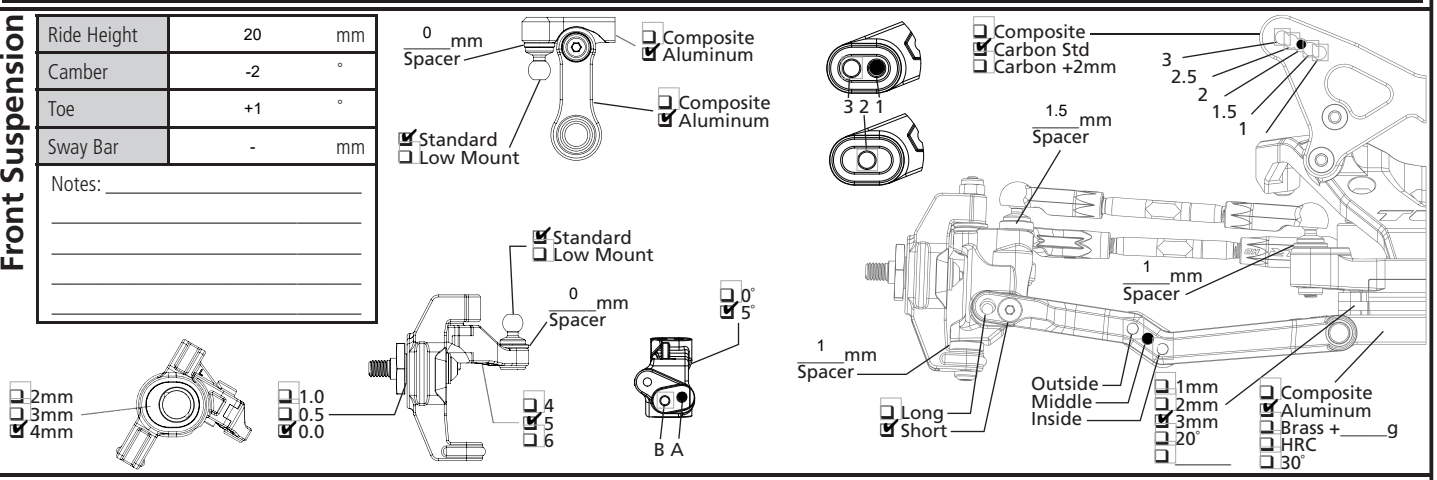


## Rear Suspension

| | | |
|---|---|---|
| Ride Height | 20 | mm |
| Camber | -2 | ° |
| Sway Bar | - | mm |

Notes: _____

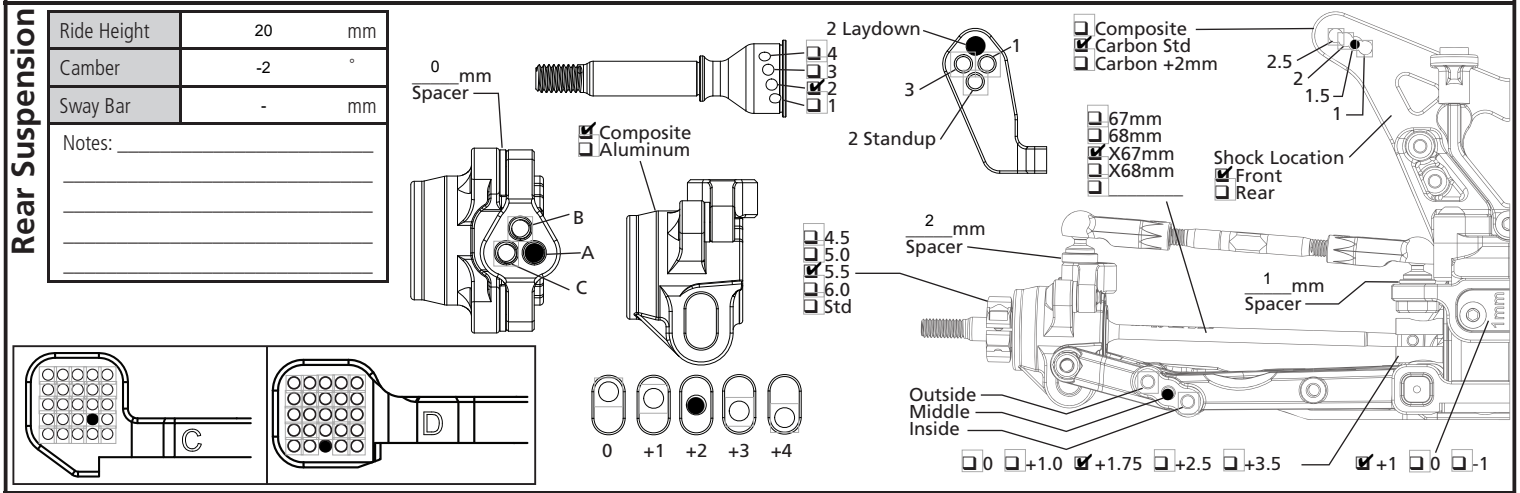


## Chassis

### Drive Train

| | |
|---|---|
| Diff Type | ☑ Ball Diff ☐ Gear Diff |
| Setting/Fluid | 3/4 rotation |
| Internal Gears | ☐ Steel ☐ Composite |
| Planet Gears | ☐ 2 ☐ 4 |
| Slipper | ☑ Slipper ☐ Direct Drive |
| Slipper Pads | ☐ Torque/Yellow ☑ Drive/Orange |

### Aerodynamics

| | |
|---|---|
| Body | PL Axis LW |
| Fr Wing | Narrow High |
| Rr Wing | TLR 6.5" |
| Wicker | 2nd Line |
| Angle | 4 ° |
| Notes | |

### Tires

| | Front | Rear |
|---|---|---|
| Brand | Pro-Line | Pro-Line |
| Tread | Shadow | Shadow |
| Compound | S3 | S3 |
| Insert | 4wd Front PL | Stock Rear |
| Sauce | Yellow LW | Yellow LW |
| Wheel | ☐ Standard ☑ Stiffezel | Yellow |
| Notes | Ground to Full Slicks | Ground to Full Slicks |

### Shocks

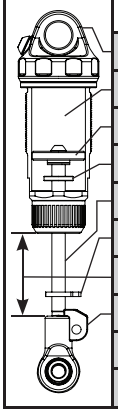

| | Front | Rear |
|---|---|---|
| Shock Caps | Aluminum | Aluminum |
| Oil | 37.5 | 32.5 |
| Piston | 2 x 1.6mm ☑ Thin | 2 x 1.7mm ☑ Thin |
| Limiter, Int | 1 mm | 0 mm |
| Shaft Dia | ☑ 3.0mm ☐ 3.5mm | ☑ 3.0mm ☐ 3.5mm |
| Limiter, Ext | 0 mm | 0 mm |
| Stroke | 24 mm | 32.25 mm |
| Eyelet | ☑ Std ☐ +2mm | ☑ Std ☐ +2mm |
| Spring | AE Gray 91329 | AE Green 91336 |
| Spring Cup | ☐ Low ☐ Mid ☑ High | ☐ Low ☑ Mid ☐ High |

### Electronics

| | | | |
|---|---|---|---|
| Radio | DX6R | ESC | Muchmore Fleta Pro V2 |
| Servo | SPMSS6240RX | Thro Prof | 3 |
| Battery | Motiv 6000mAh | Timing Adv | 0 |
| Battery Wt | 215 g | Initial Brake | DB |
| Motor | Movit 7.5T | Drag Brake | 15% |
| Gearing | 21 / 78 | Thr/Bra EPA | 100 / 75 |

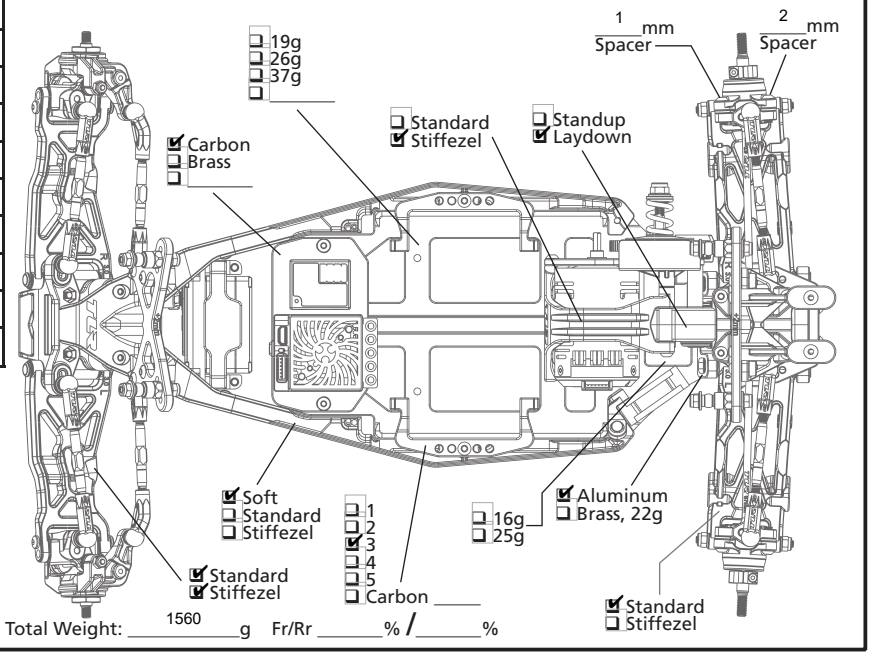


Total Weight: 1560 g Fr/Rr _____% / _____%

64970