Name: Ryan Cavalieri	Date: March 2021	Event: 2021 Desert Classic	Track: Hobby Action RC Raceway

Track Conditions

☑ Indoor	☑ Clay	☐ Carpet	☐ Tight	☑ Smooth	☑ Hard Packed	☐ Blue Groove	☐ Wet	Bite: ☐ Low ☐ Med ☑ High	Other:
☐ Outdoor	☐ Dirt	☐ Astro	☑ Open	☐ Rough	☐ Loose/Loamy	☑ Dry	☐ Dusty	Tread: ☐ Pin ☐ Ghost ☑ Slicks	

Front Suspension

Ride Height	19	mm
Camber	-1	°
Toe	0	°
Sway Bar	-	mm

Notes: TLR334079 Front Pivot
AVID Pivot Shims (AV1098)

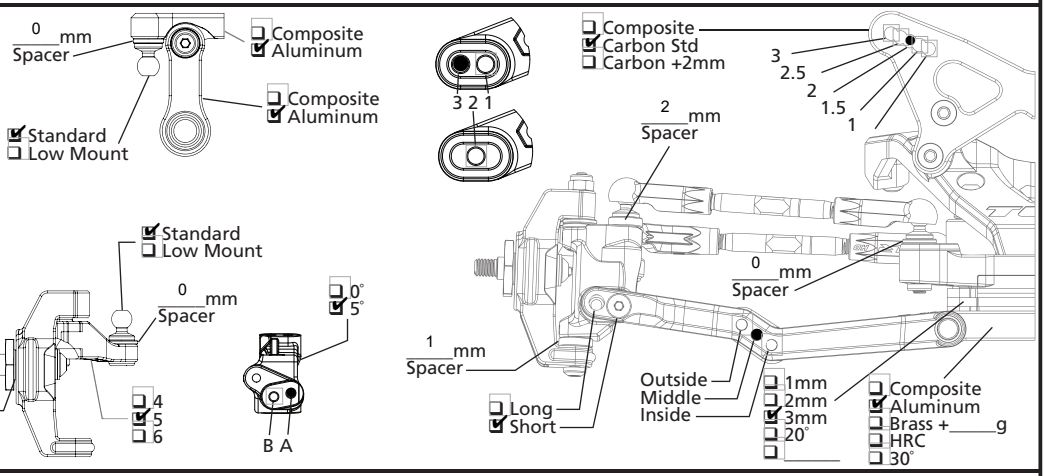

Rear Suspension

Ride Height	19	mm
Camber	-1	°
Sway Bar	-	mm

Notes: 22X-4 rear arms, inside shock location

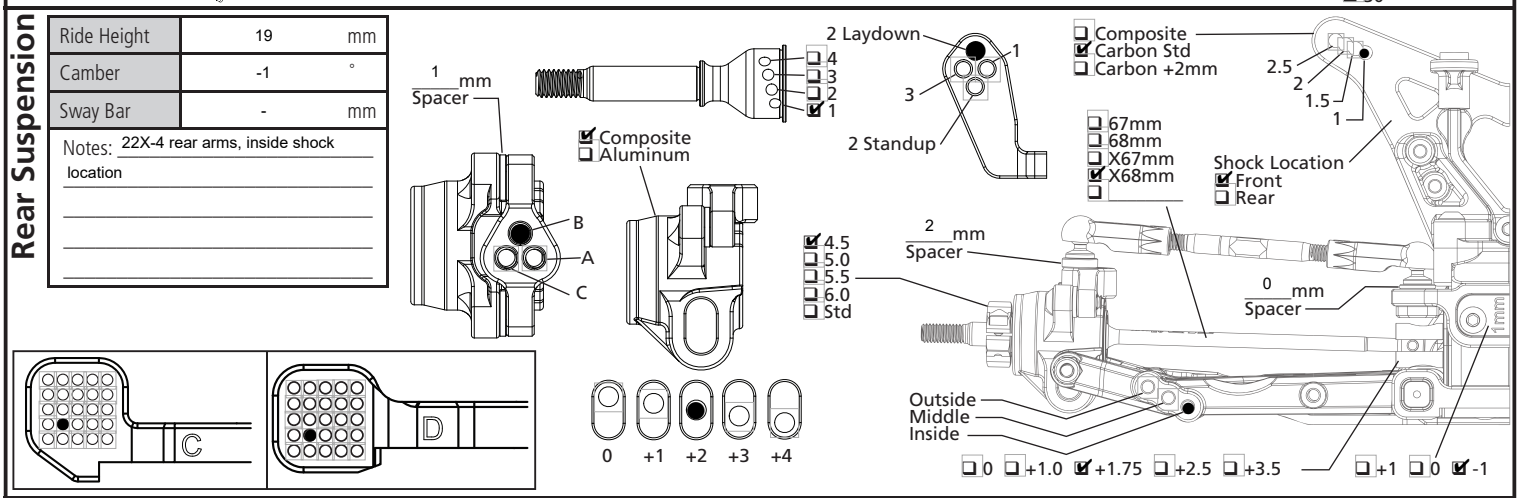

Chassis

Drive Train

Diff Type	☑ Ball Diff ☐ Gear Diff
Setting/Fluid	Tight
Internal Gears	☐ Steel ☐ Composite
Planet Gears	☐ 2 ☐ 4
Slipper	☑ Slipper ☐ Direct Drive
Slipper Pads	☐ Torque/Yellow ☑ Drive/Orange

Aerodynamics

Body	Pro-Line Axis LW
Fr Wing	TLR High Narrow
Rr Wing	Pro-Line
Wicker	1st Line
Angle	2 °
Notes	

Tires

	Front	Rear
Brand	Pro-Line	Pro-Line
Tread	Shadows 2wd Fronts	Shadows
Compound	S3	S3
Insert	Stock	Stock
Sauce	Yellow LW	Yellow LW
Wheel	☐ Standard ☐ Stiffezel	Pro-Line Wheels
Notes	Full Slicks	Full Slicks

Shocks

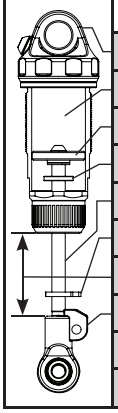

	Front	Rear
Shock Caps	Domed	Domed
Oil	32.5	27.5
Piston	2 x 1.6 ☐ Thin	2 x 1.7 ☐ Thin
Limiter, Int	1 mm	2 mm
Shaft Dia	☑ 3.0mm ☐ 3.5mm	☑ 3.0mm ☐ 3.5mm
Limiter, Ext	- mm	- mm
Stroke	24 mm	28.3 mm
Eyelet	☑ Std ☐ +2mm	☑ Std ☐ +2mm
Spring	AE Blue V2	AE White V1
Spring Cup	☐ Low ☑ Mid ☐ High	☑ Low ☐ Mid ☐ High

Electronics

Radio	M17	ESC	Muchmore
Servo	Savox 1258	Thro Prof	
Battery	Muchmore	Timing Adv	
Battery Wt	192 g	Initial Brake	
Motor	Muchmore	Drag Brake	
Gearing	22 / 78	Thr/Bra EPA	/

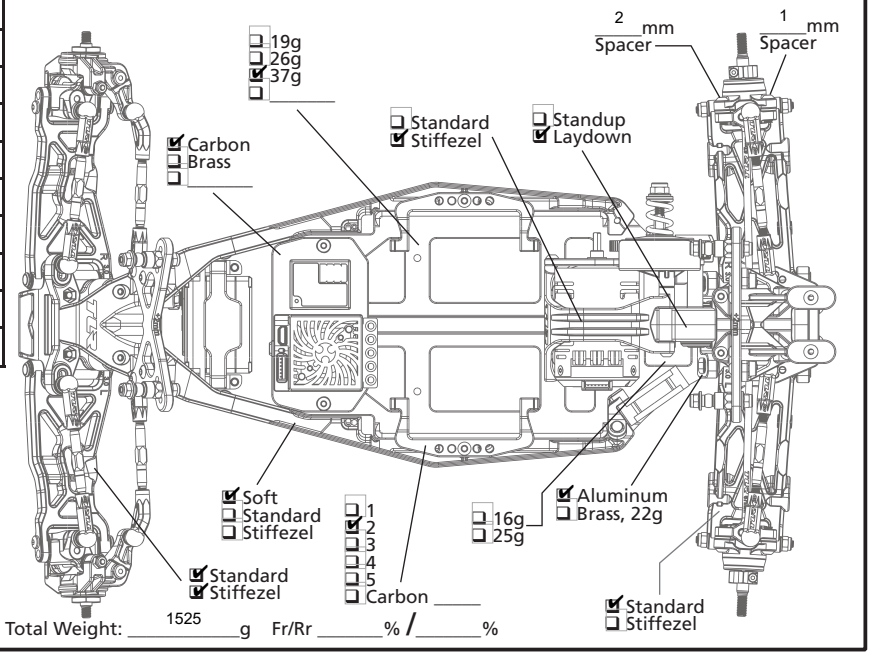

Total Weight: 1525 g Fr/Rr ____% / ____%

64970